DVC 630-S 3x400V

Vertical blow out roof fan model DVC, manufactory ST-Fans.

Backward curved blades made of polyamide PA 6 for type 190 to 225. From type 315 to 630, the impellers are made of Polypropylene PP and are driven by a high efficiency and energy-efficient EC motor.

These roof fans have an excellent noise level and are maintenance-free and reliable. The maximum temperature of the air to be moved is a maximum of 60 ° C. The base plate is made of galvanized sheet steel.

The rain cover is completely made of seawater resistant aluminum AlMg 3. Sealing tape and mounting material are supplied as standard.

General data:

Max Air flow	13.324	m3/h
Impeller speed	1.656	rpm
Input power	3,138	kW
Voltage (nominal)	3x400/50/60	V/Hz
Input current	4,55	A
Enclosure class, motor	55	IP
Weight	80,0	kg
Sound pressure level ±2*	64	dB(A)

** (at 4 m near the fan with inlet and outlet ducted, in free field)*

Options:

Flat roof socket	DOK 560/630
Silencer for use below roof	OGD 560/630
Silencer for use above roof	BGD 560/630
Gravity Louvre shutter	SJ 560/630
Roof duct	DDR 560/630
Gravity Back draft damper	VKS 560/630
Roof socket for inclined roof	DS 560/630
Roof socket for inclined roof / lead slab	DSL 560/630
Speed control	MTV- 1/010

Subject to changes and typing errors.

Assembly examples:

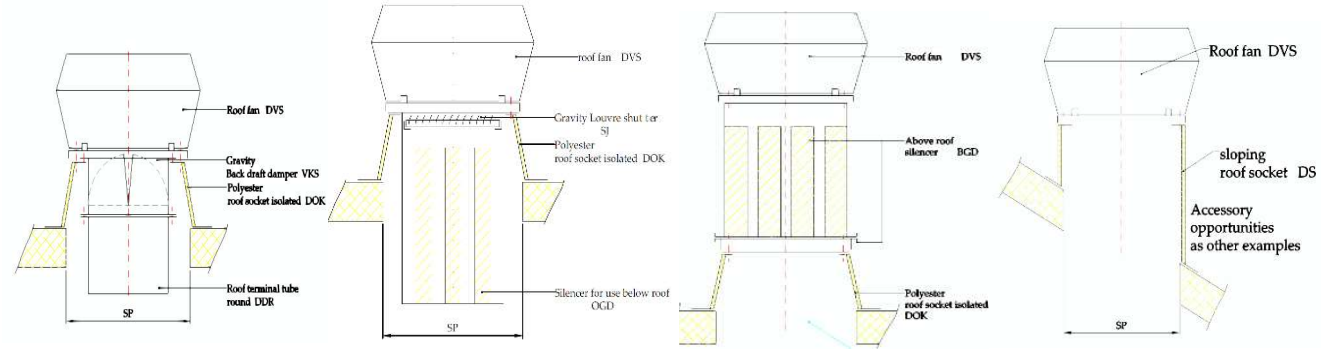

Curve:

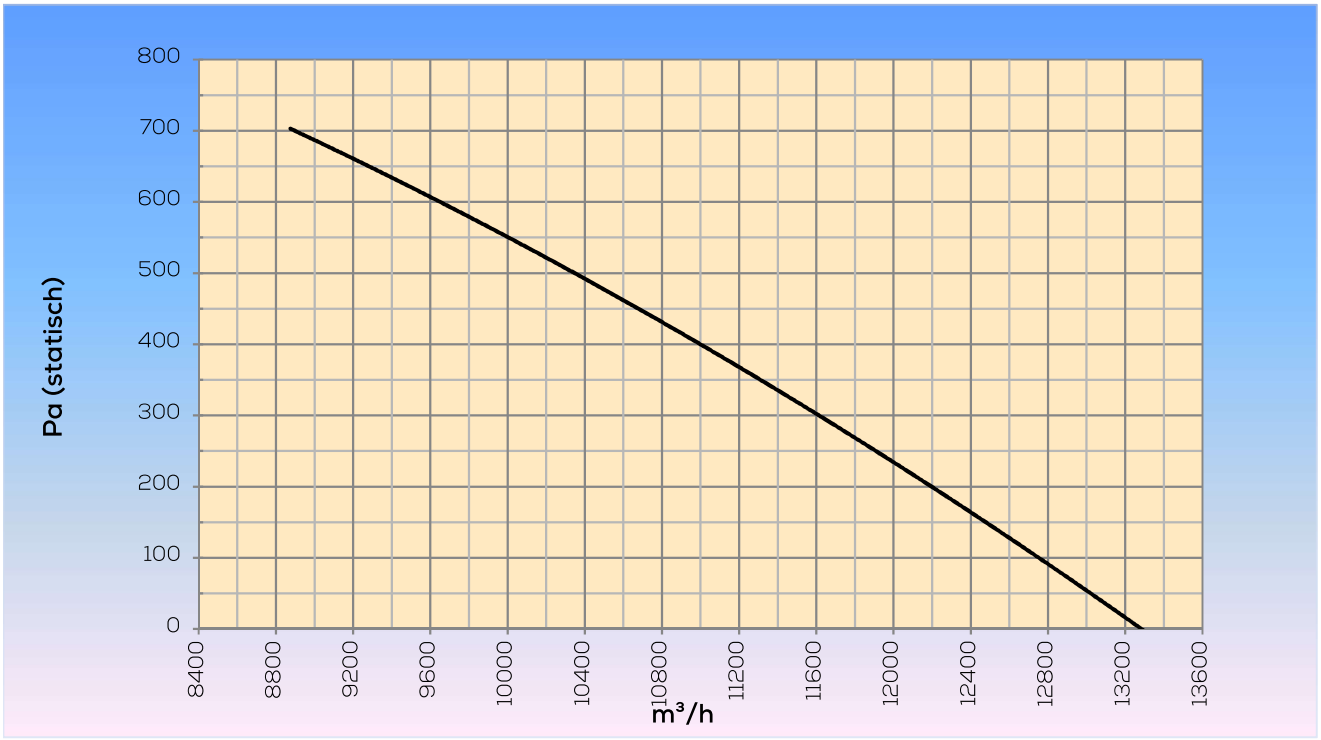

Dimensions:

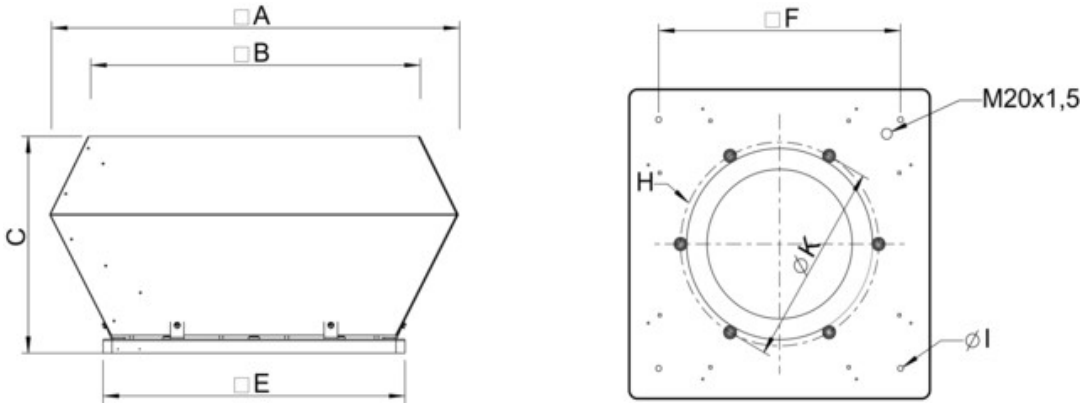

□A	□B	C	□E	□F	H	øK	øI
1150	960	565	939	750	8xM8	605	14(4x)

Subject to changes and typing errors.