APRH 632B

Centrifugal fan **model APRH, Es.4**
Single inlet fan, direct driven with an IEC-standard motor in form B3 which is mounted on a motorbase. This series of high-pressure fans is characterized by a high efficiency with electricity saving by installing a special impeller with backward curved blades. . De blades are welded between the back plate disc and the aerodynamically formed front plate. The robust industrial fan is totally made of steel and painted in the agate grey color RAL 7038. The fan is suitable for the transportation of clean and slightly dusty air.

General data:

Drive	direct	
Motor position	horizontal	
Material casing/base	Steel	
Material impeller/hub	Steel	
Coating/protection	RAL 7038	
Operating temperature (max.)	15 (80)	°C
Medium density (altitude 0 m)	1,226	kg/m^3
Impeller speed	2.945	rpm
Weight	297	kg
Sound pressure level ±3 (at 1,5 m near the fan with inlet and outlet ducted, in free field)	90	dB(A)

Electric motor:	160L	IEC
Power	18,5	kW
Motor soeed	2.945	rpm
Electric supply	3x400V50Hz	V/Hz
Full load current	33,9	A
Enclosure	55	IP
Shape	B3T	
Efficiency class	IE3	

Curve APRH 632B @ 2945rpm @ 15°C @ 0m

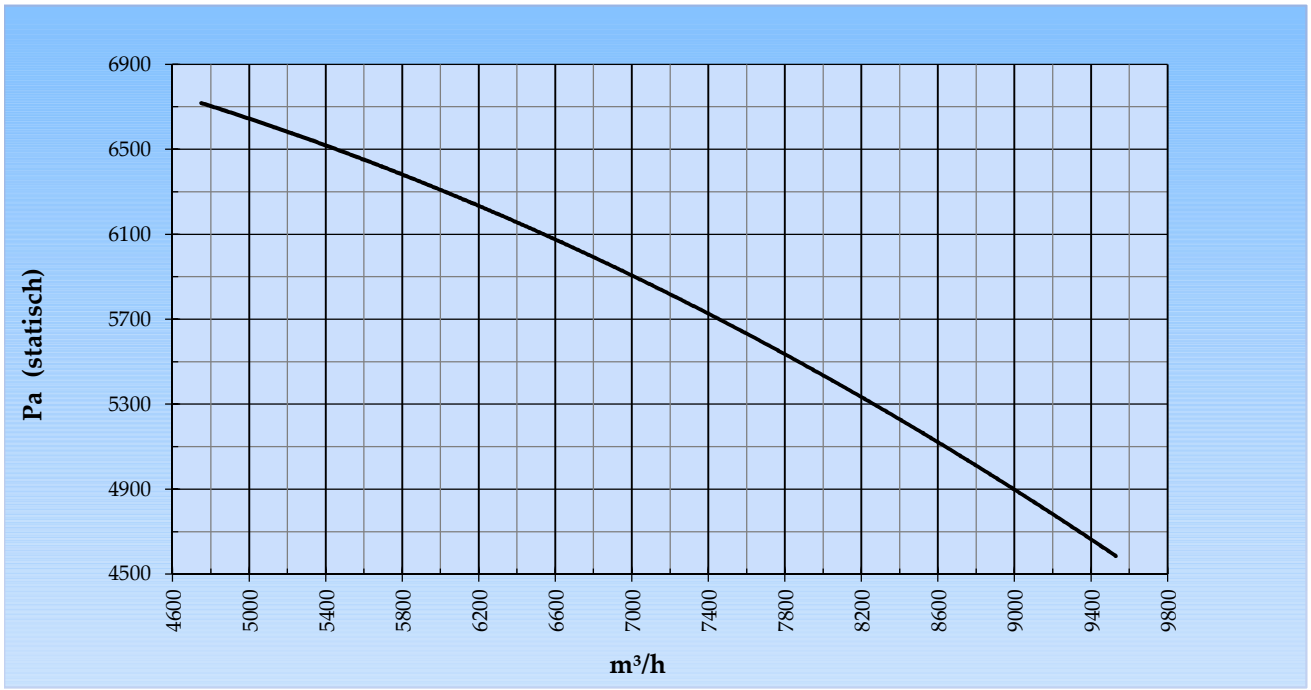

Possible discharge positions:

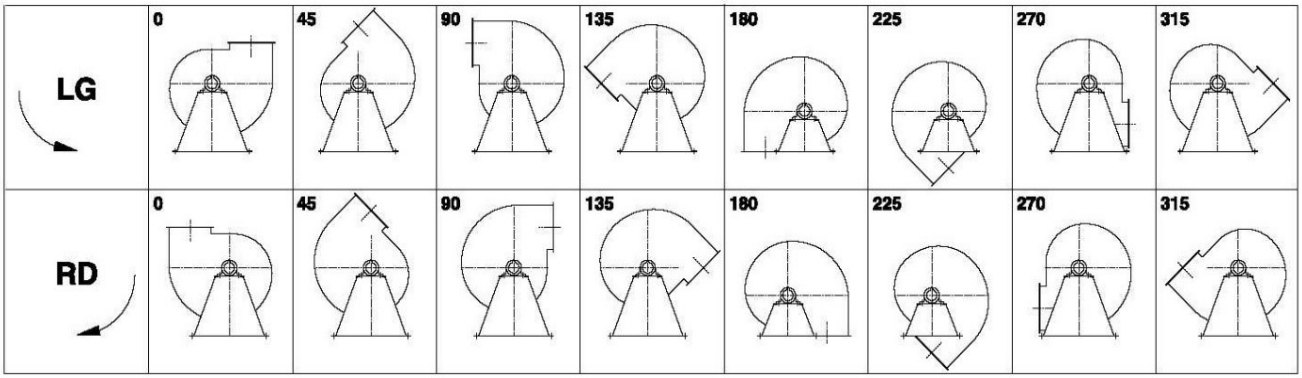

** (Pos 180 and 225 extra price)*

Possible accessories

Mounting profiles for load distribution	AP16001ST
Counterflange inlet/outlet	
Flexible connection inlet/outlet max. 80°C	zzØ 321 / pz 315x224
Anti-vibration mountings	4x 50x40/B/70° ShA
Inspectiondoor	
Drain	
Shaft seal without asbestos	
Coolingwheel (medium max. 150°C)	(incl. coating RAL9006)
Flexible connection inlet/outlet max. 150°C	zzØ 321 / pz 315x224
ATEX version	Zone 1 / 2 / 21 / 22
ATEX motor	Ex nA / Exe / Ex de
Coating suitable for outdoor application	RAL 5010 / RAL ....
Stainless steel version	304 / 316 / ...
Acoustic enclosure	

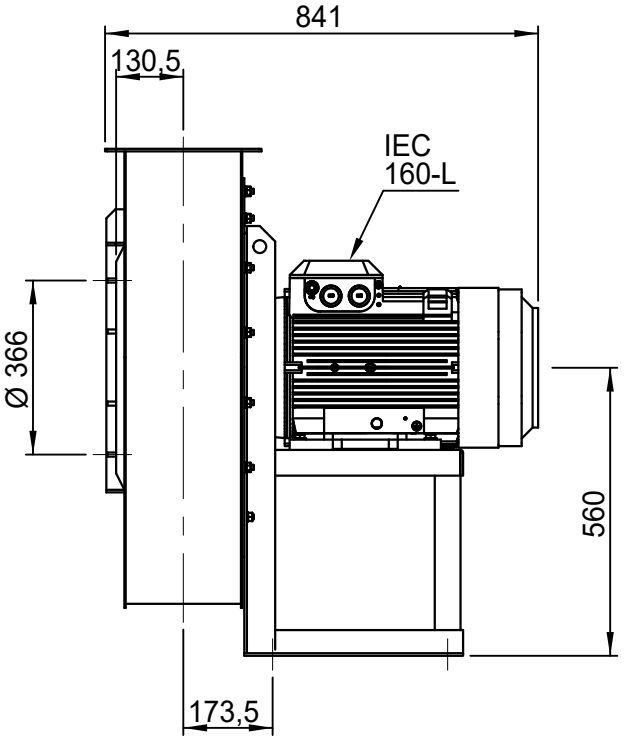

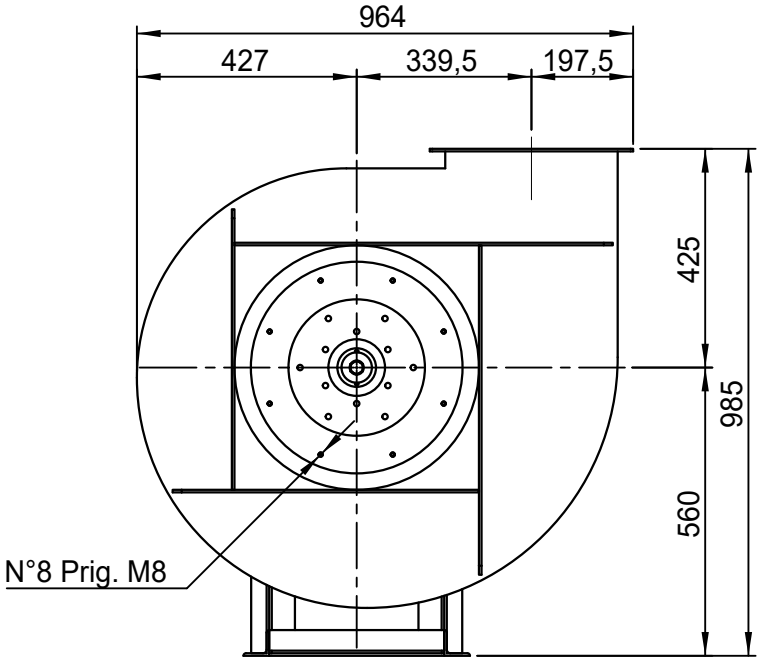

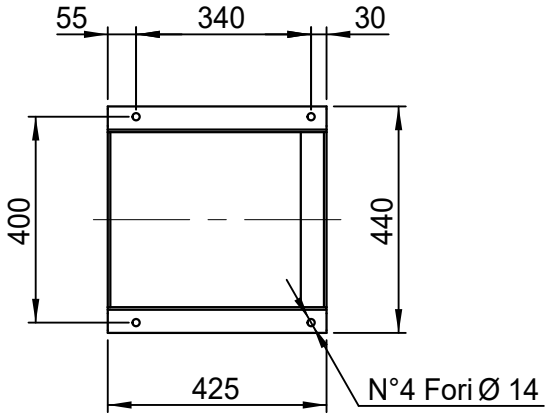

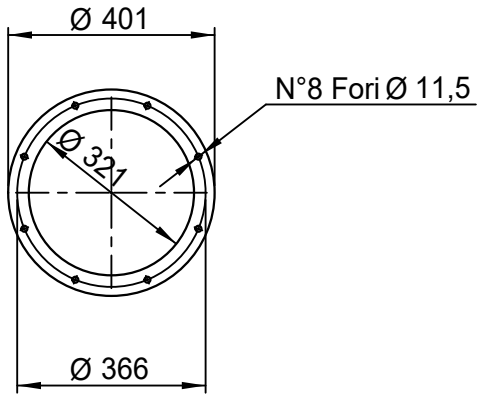

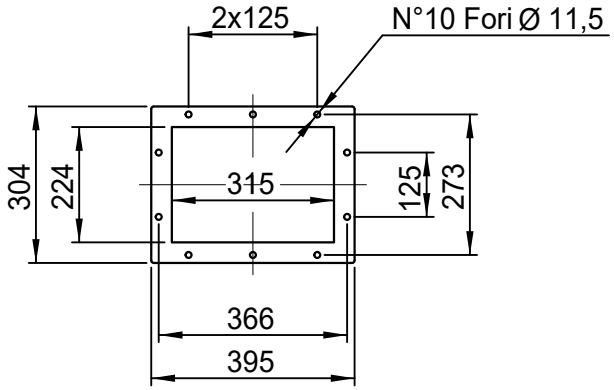

DESCRIZIONE - DESCRIPTION APRH 632/B - RD 0	SCALA 1:14	DISEGNATO - PREPARED	FORMATO
	DATA 09/03/2015	Duregotti P.	A4
	SOSTITUISCE IL - REPLACED THE N° APRH632A411B000		
	SOSTITUITO DAL - REPLACES BY N°		
Copy 1-7-2020	Slingerland ventilatoren	N.DISEGNO - N.DRAWING VAPRH632B0007	REV. 00

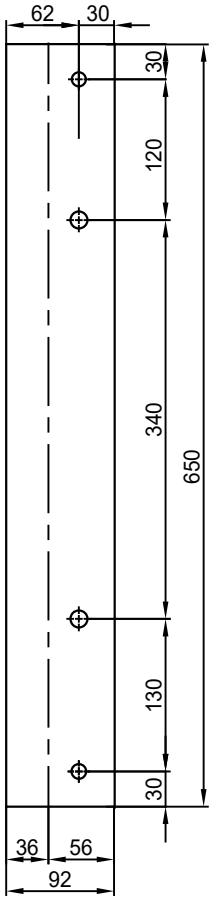

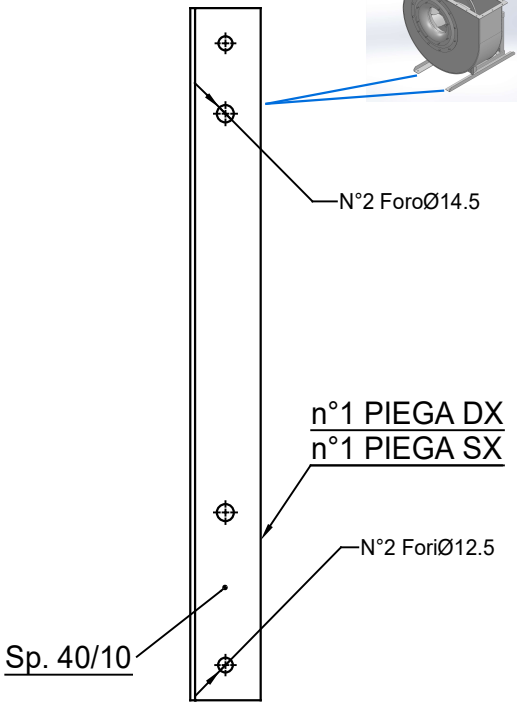

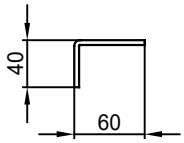

COMM.
N°

REV	DATA - DATE	DESCRIZIONE - DESCRIPTION		APPROVATO APPROVED
00	04/02/2016	PRIMA EMISSIONE	RK	RK
01	16/09/2020	Extension pedestal	MvS	MvS

DESCRIZIONE - DESCRIPTION	MATERIALE - MATERIAL	NR.FILE	PESO - WEIGHT
	Fe 360		Kg

DESCRIZIONE - DESCRIPTION

Staffe per Puffer L=650
IEC 160 / AP series

SCALA	DISEGNATO - PREPARED	FORMATO
1:4.5	RK	A4
DATA 04/02/2016		

SOSTITUISCE IL - REPLACED THE N°
SOSTITUITO DAL - REPLACES BY N°

N.DISEGNO - N.DRAWING

STF-AP16001ST

Slingerland ventilatoren

REV.

01