KA202

Research Data

Air-flow rate[m3/h]	1053
Pressure[Pa]	792.1
Type of pressure	Psta
Power supply	all
Density[m3/h]	1.205

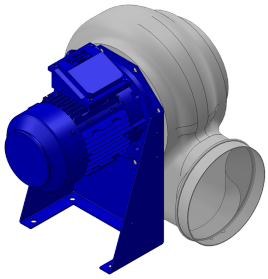

- Pe moulded housing
- INOX impeller
- epoxy paintedmotor support
- stainless steel screws

Label

Code	PA202
Voltage[V]	400
Phases	3
Current[A]	
Poles	2
Weight[kg]	18
Frequency[Hz]	50
Speed[rpm]	2800
Power[kW]	1.1
IP	55
INS	

Table engines

Class IE	IE1	IE2	IE3
Size	80	80	80
Power[kW]	1.1	1.1	1.1
Current[A]	2.51	2.43	2.4
Voltage[V]	400	400	400
Cos φ	0.83	0.82	0.82
n	0.762	0.796	0.827

Working point

Q [m3/h]	1053
Psta [Pa]	792.1
Ptot [Pa]	805.3
Pin [kW] [W]	1226.
nsta	0.188
ntot	0.192
Rpm	2800

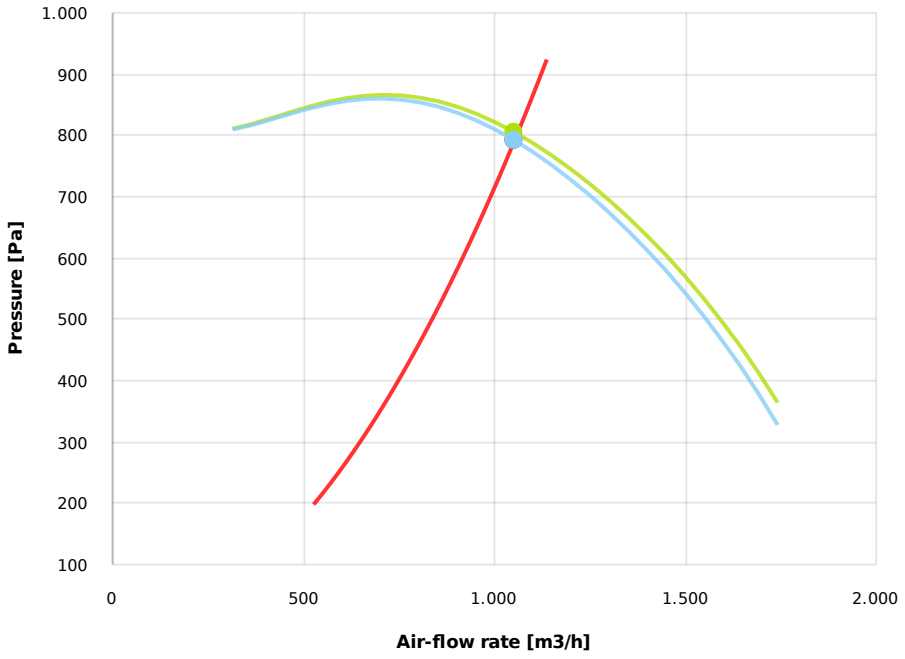

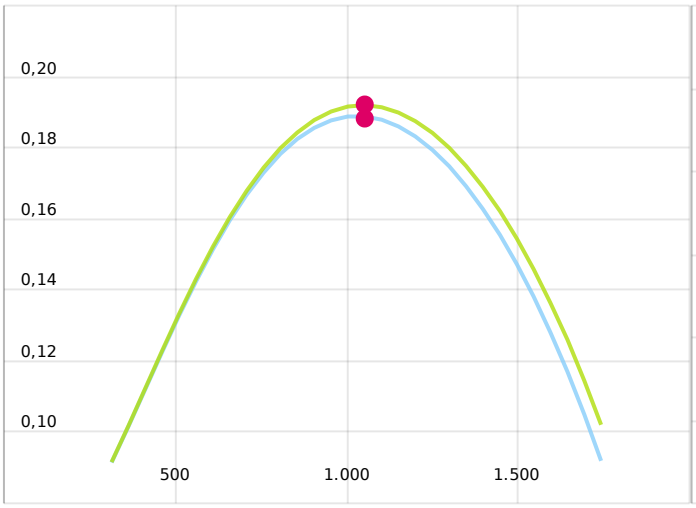

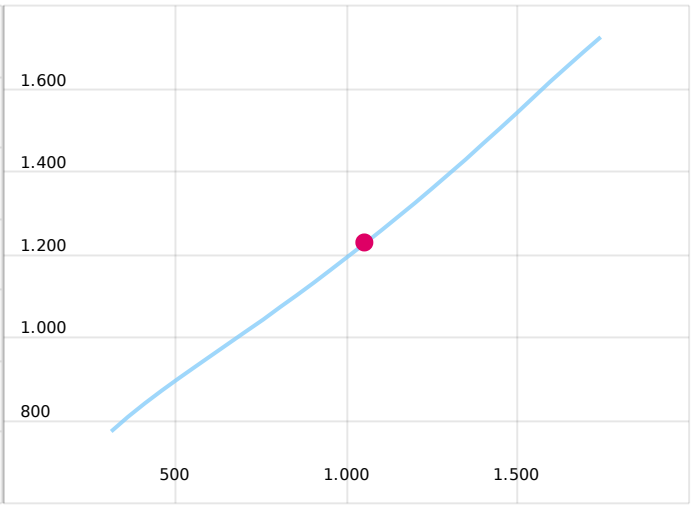

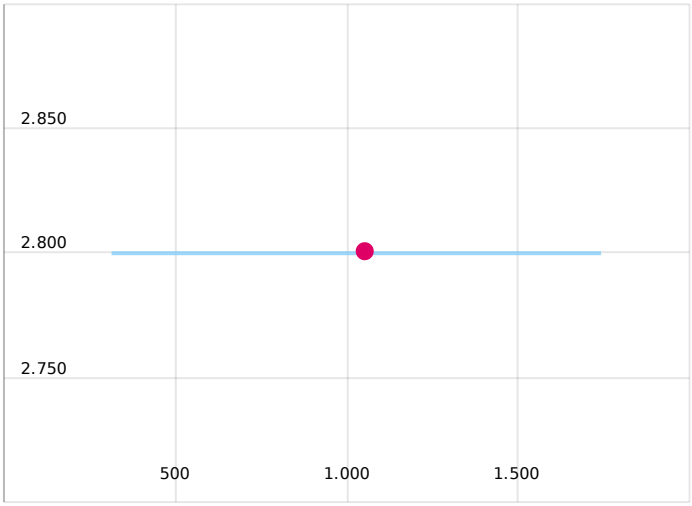

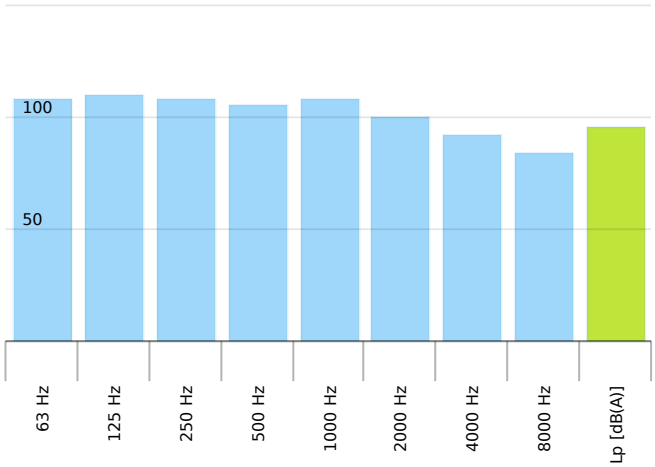

Dimensions

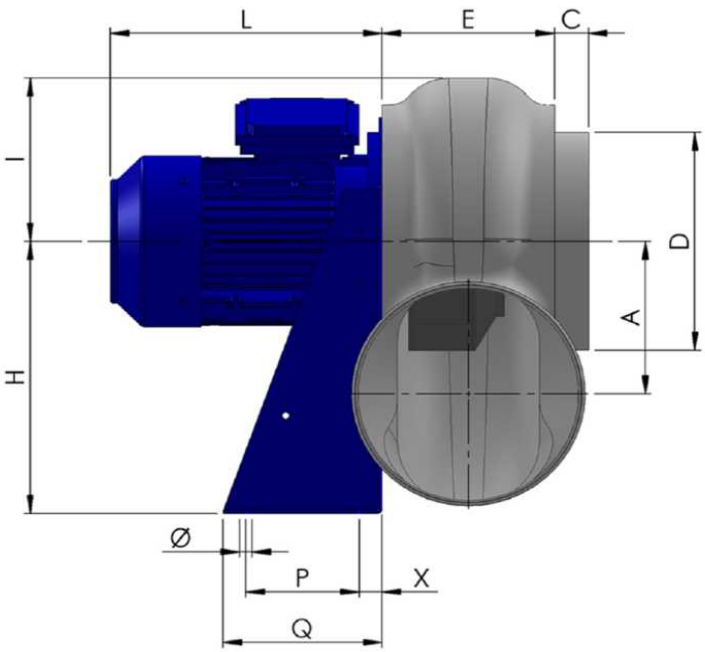

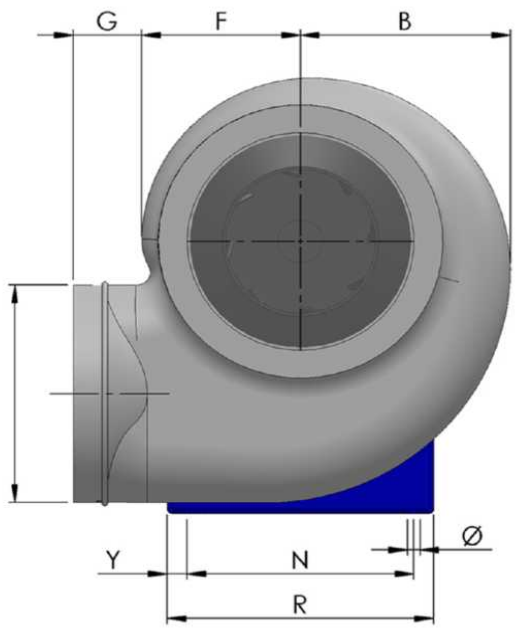

A	B	C	D	E	F	G	H	I	L	N	Ø	P	Q
140	185	30	200	155	140	60	250	150	260	200	11	100	140

R	X	Y
235	20	17.5
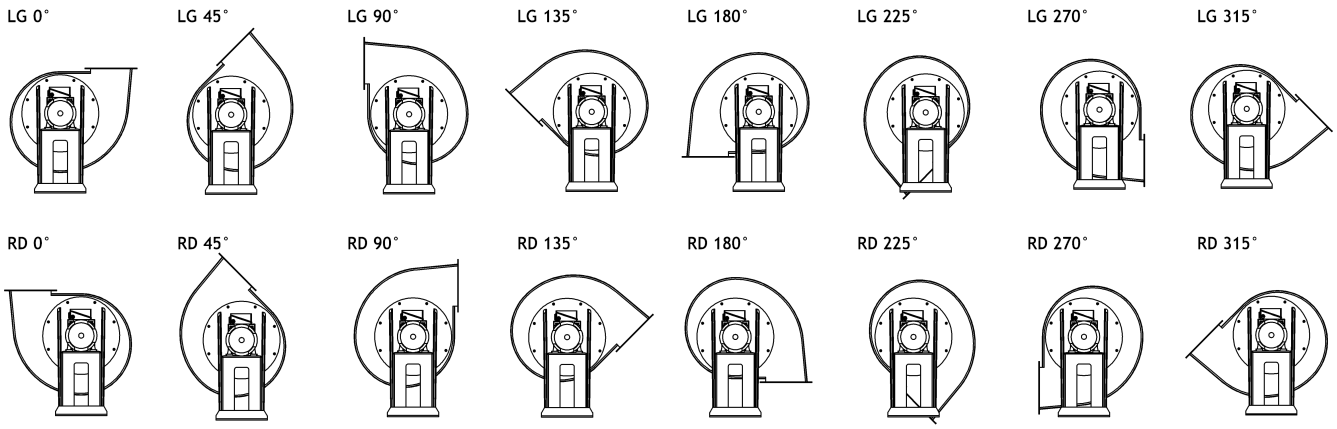
Configurations & cad