DVC 500-S 3x400V

Vertical blow out roof fan model DVC, **manufactory ST-Fans.**

Backward curved blades made of polyamide PA 6 for type 190 to 225. From type 315 to 630, the impellers are made of Polypropylene PP and are driven by a high efficiency and energy-efficient EC motor.

These roof fans have an excellent noise level and are maintenance-free and reliable. The maximum temperature of the air to be moved is a maximum of 60 ° C. The base plate is made of galvanized sheet steel.

The rain cover is completely made of seawater resistant aluminum AlMg 3. Sealing tape and mounting material are supplied as standard.

General data:

Max Air flow	**8.258**	m3/h
Impeller speed	**1.350**	rpm
Input power	**1,349**	kW
Voltage (nominal)	**3x400/50/60**	V/Hz
Input current	**1,97**	A
Enclosure class, motor	**55**	IP
Weight	**41,3**	kg
Sound pressure level ±2*	**55**	dB(A)

** (at 4 m near the fan with inlet and outlet ducted, in free field)*

Options:

Flat roof socket	**DOK 450/500**
Silencer for use below roof	**OGD 450/500**
Silencer for use above roof	**BGD 450/500**
Gravity Louvre shutter	**SJ 450/500**
Roof duct	**DDR 355/400/450/500**
Gravity Back draft damper	**VKS 355/400/450/499/500**
Roof socket for inclined roof	**DS 450/500**
Roof socket for inclined roof / lead slab	**DSL 450/500**
Speed control	**MTP 10**

Assembly examples:

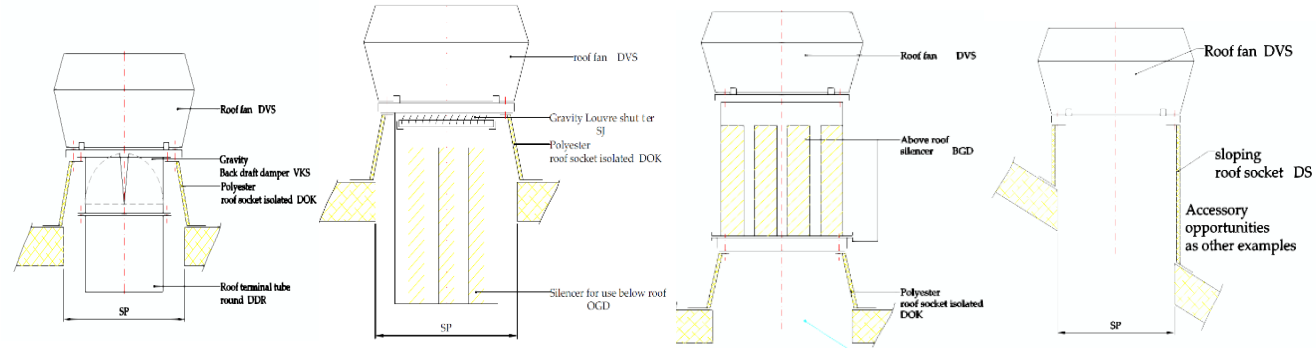

Curve:

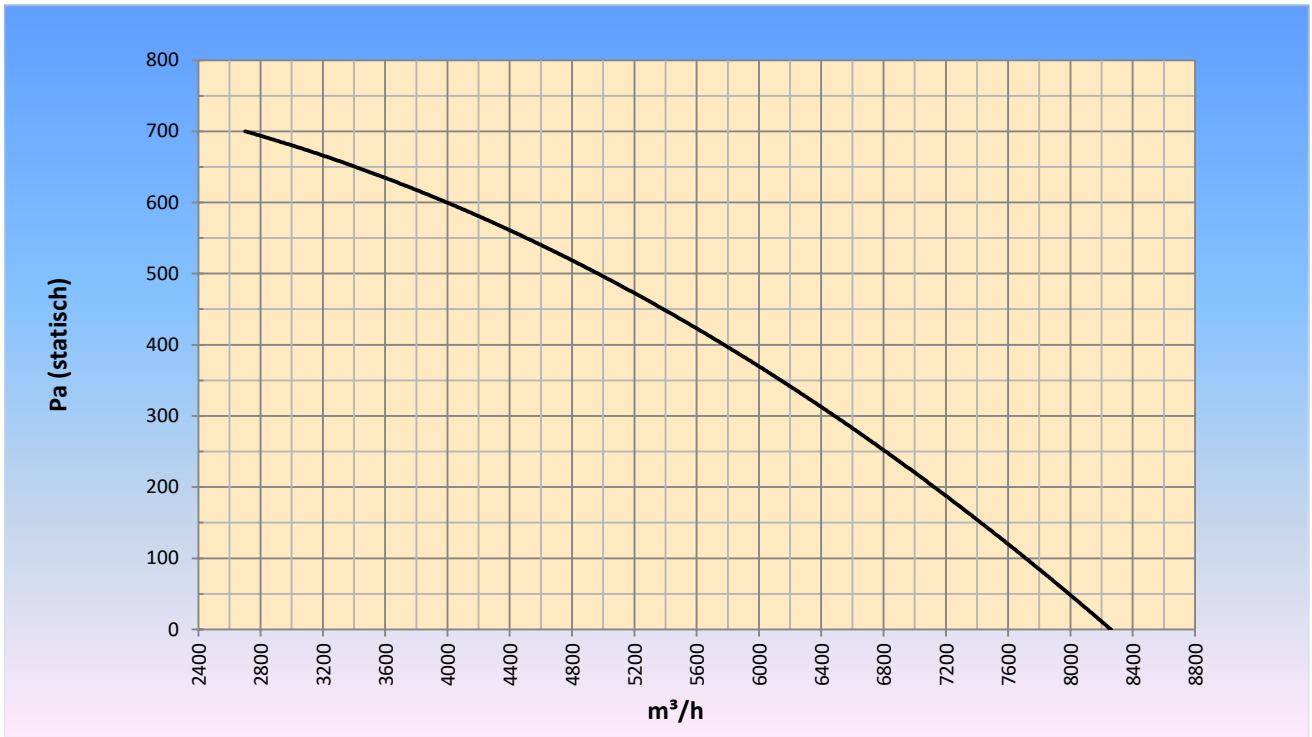

Dimensions:

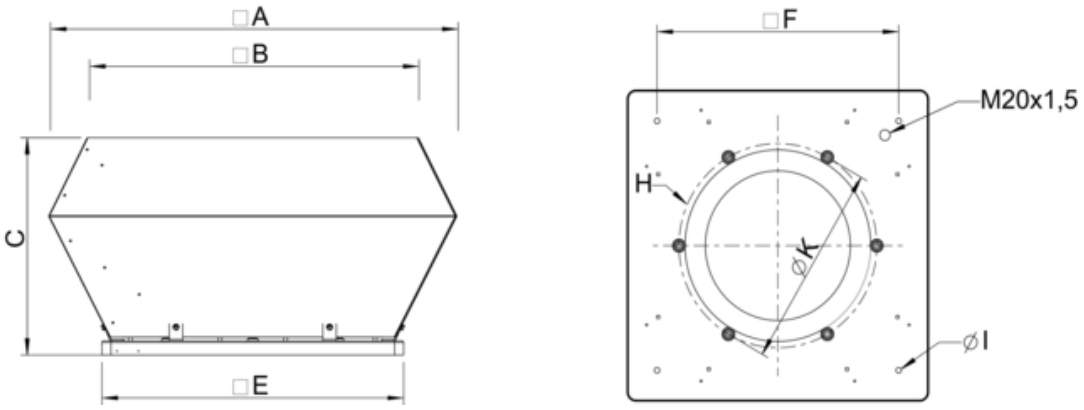

□A	□B	C	□E	□F	H	øK	øI
903	730	467	665	535	6xM8	438	12(4x)

Subject to changes and typing errors.