BPR 801D

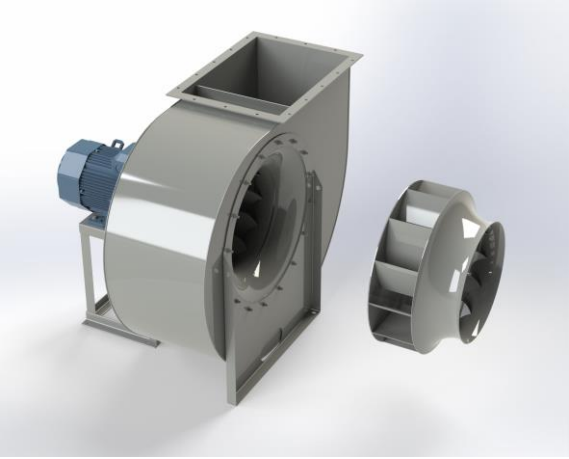

Centrifugal fan model BPR, Es.4
Single inlet fan, direct driven with an IEC-standard motor in form B3 which is mounted on a motorbase. The overhang impeller is mounted on the motor shaft and has backwardly curved blades. De blades are welded between the back plate disc and the aerodynamically formed front plate. The robust industrial fan is totally made of steel and painted in the agate grey color RAL 7037,. The fan is suitable for the transportation of clean and slightly dusty air.

General data:

Drive	**direct**	
Motor position	**horizontal**	
Material casing/base	**Steel**	
Material impeller/hub	**Steel**	
Motorcoating/protection	**RAL 7037**	
Operating temperature (max.)	**15 (80)**	**°C**
Medium density (altitude 0 m)	**1,226**	**kg/m3**
Impeller speed	**975**	**rpm**
Weight	**429**	**kg**
Sound pressure level ±3 *(at 1,5 m near the fan with inlet and outlet ducted, in free field)*	**75**	**dB(A)**

Electric motor:

	160M	**IEC**
Power	**7,5**	**kW**
Motor speed	**975**	**rpm**
Electric supply	**3x400V50Hz**	**V/Hz**
Full load current	**14,8**	**A**
Enclosure	**55**	**IP**
Shape	**B3T**	
Efficiency class	**IE3**	

wijzigingen en typefouten voorbehouden

Curve BPR 801D @ 975rpm @ 15°C @ 0m

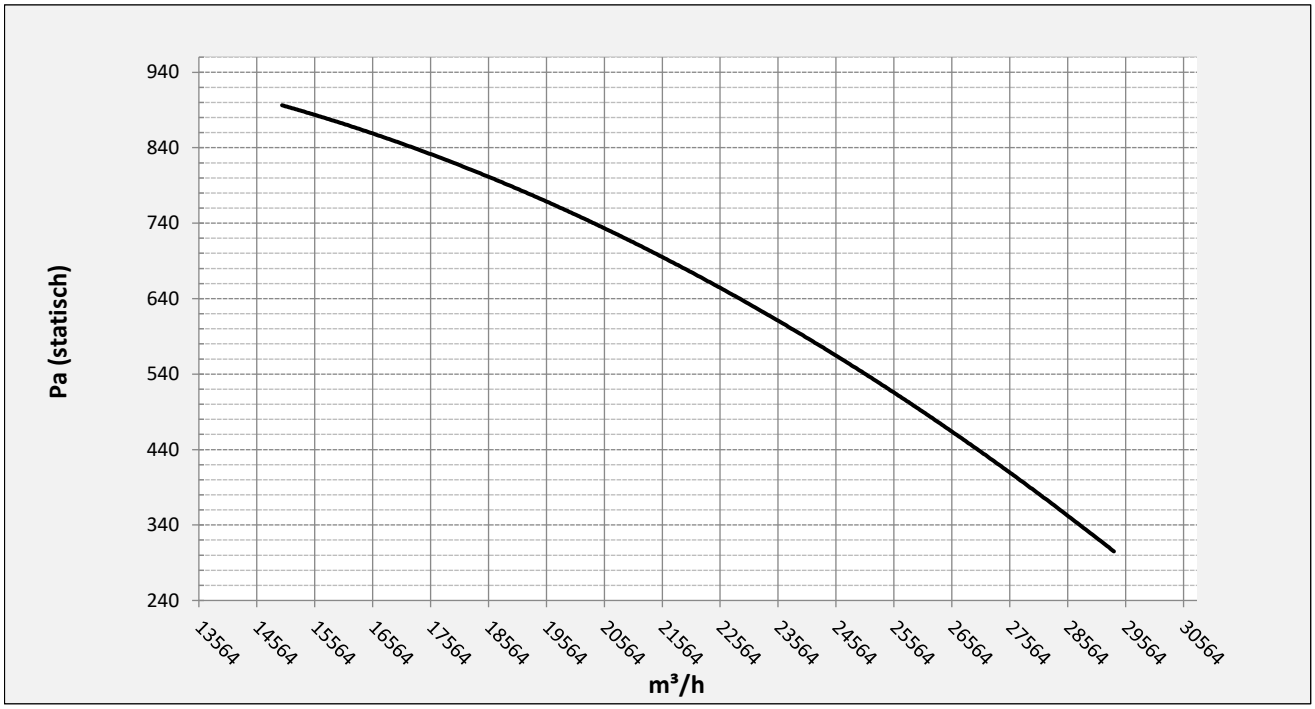

Possible discharge positions:

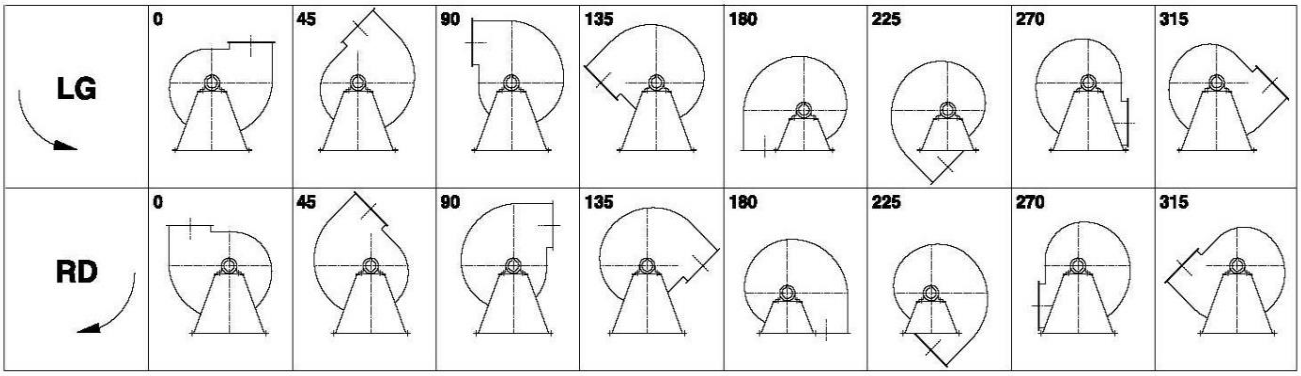

* (Pos 180 and 225 extra price)

Possible accessories

Mounting profiles for load distribution	--
Counterflange inlet/outlet	zz Ø800 / pz 800x560
Flexible connection inlet/outlet max. 80°C	zz Ø900 / pz Ø1000
Anti-vibration mountings	6x 50x40/B/40° ShA
Inspectiondoor	
Drain connection	
Shaft seal without asbestos	
Coolingwheel (medium max. 150°C)	(incl. coating RAL9006)
Flexible connection inlet/outlet max. 150°C	zz Ø900 / pz Ø1000
ATEX version	Zone 1 / 2 / 21 / 22
ATEX motor	Ex nA / Exe / Ex de
Coating suitable for outdoor application	RAL 5010 / RAL ….
Stainless steel version	304 / 316 / …
Acoustic enclosure	

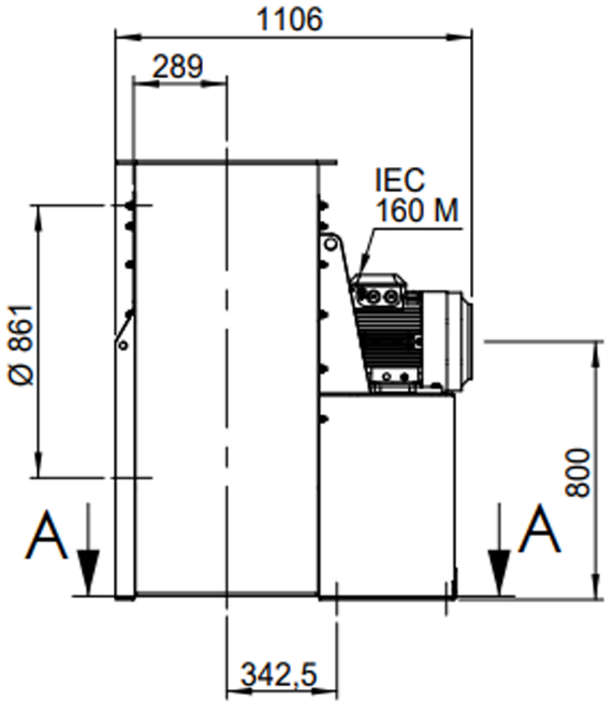

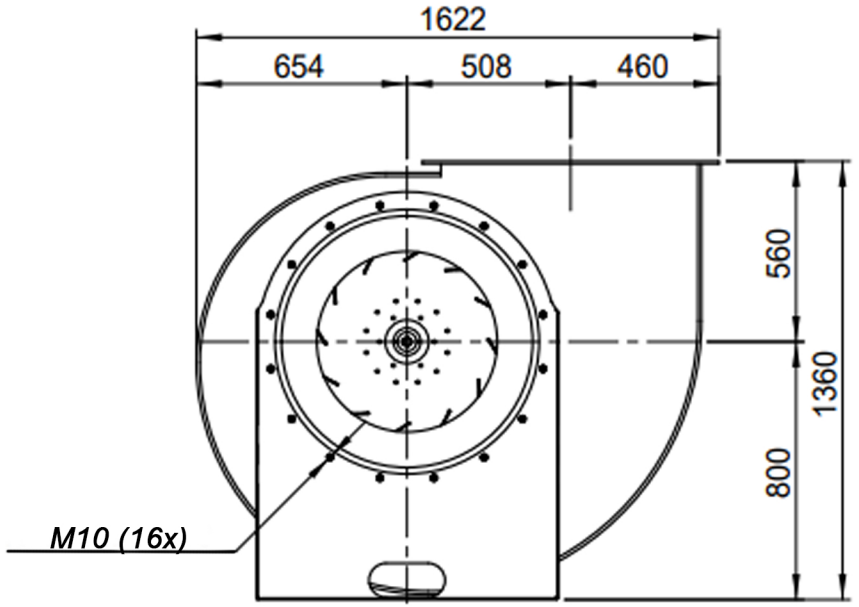

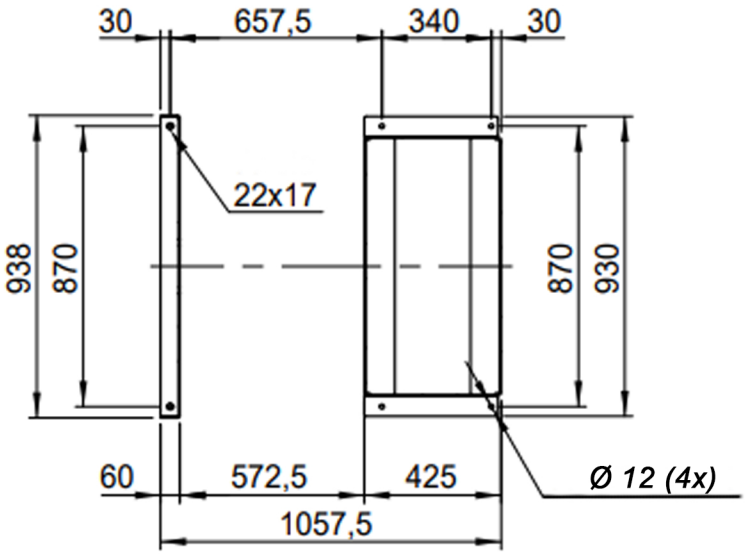

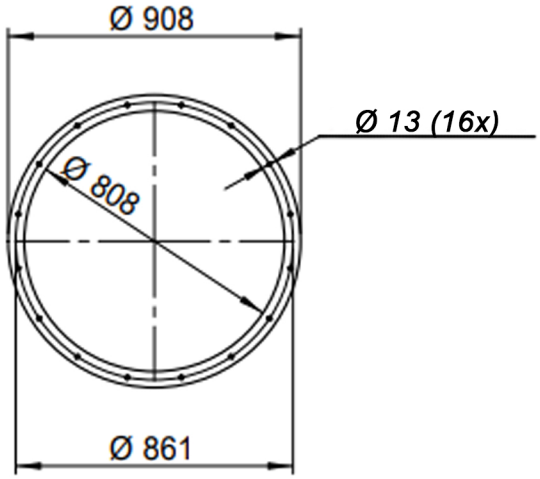

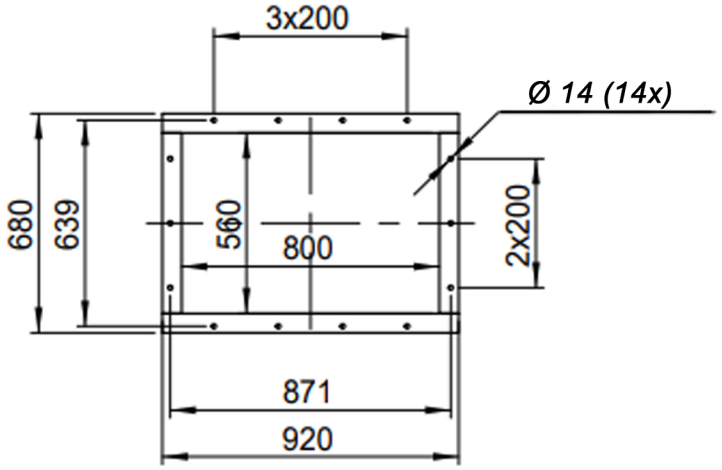

DESCRIPTION-BESCHRIJVING	SCHAAL	GEMAAKT - PREPARED	FORMAAT
BPR 801/D - RD0	1:24	Overmeer E.	A4
	DATUM 12/10/2023		
Slingerland ventilatoren	N.TEKENING - N.DRAWING V1BPR 801/D		REV. 00