BPR 351D

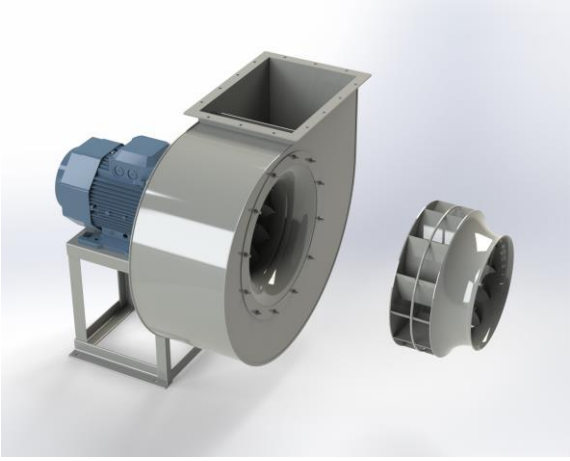

Centrifugal fan model BPR, Es.4
Single inlet fan, direct driven with an IEC-standard motor in form B3 which is mounted on a motorbase. The overhang impeller is mounted on the motor shaft and has backwardly curved blades. De blades are welded between the back plate disc and the aerodynamically formed front plate. The robust industrial fan is totally made of steel and painted in the agate grey color RAL 7037,. The fan is suitable for the transportation of clean and slightly dusty air.

General data:

Drive	direct	
Motor position	horizontal	
Material casing/base	Steel	
Material impeller/hub	Steel	
Motorcoating/protection	RAL 7037	
Operating temperature (max.)	15 (80)	°C
Medium density (altitude 0 m)	1,226	kg/m3
Impeller speed	1385	rpm
Weight	55	kg
Sound pressure level ±3 *(at 1,5 m near the fan with inlet and outlet ducted, in free field)*	65	dB(A)

Electric motor:

	71	IEC
Power	0,37	kW
Motor speed	1.385	rpm
Electric supply	3x400V50Hz	V/Hz
Full load current	0,987	A
Enclosure	55	IP
Shape	B3T	
Efficiency class	IE3	

Curve BPR 351D @ 1385rpm @ 15°C @ 0m

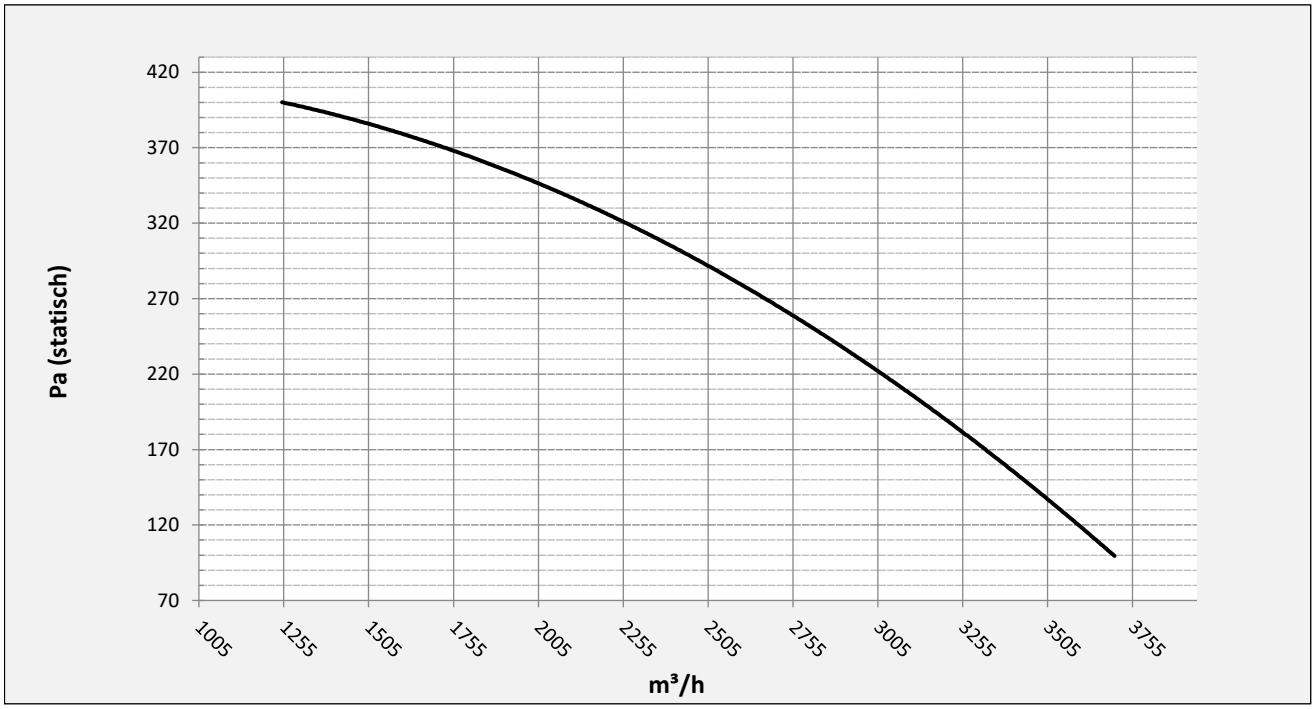

Possible discharge positions:

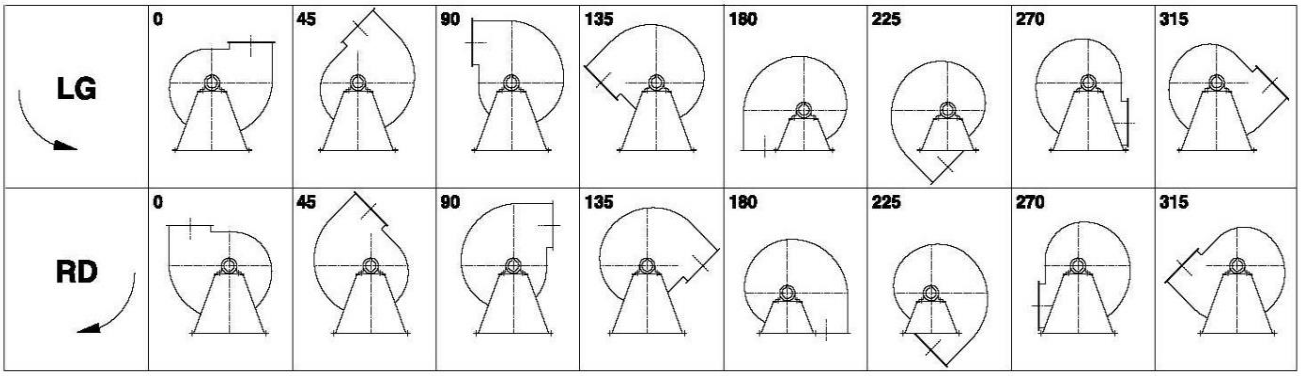

* (Pos 180 and 225 extra price)

Possible accessories

Mounting profiles for load distribution	**STF 047502**
Counterflange inlet/outlet	**zz Ø355 / pz 355x250**
Flexible connection inlet/outlet max. 80°C	**zz Ø400 / pz Ø450**
Anti-vibration mountings	**4x 30x20/B/40° ShA**
Inspectiondoor	
Drain connection	
Shaft seal without asbestos	
Coolingwheel (medium max. 150°C)	**(incl. coating RAL9006)**
Flexible connection inlet/outlet max. 150°C	**zz Ø400 / pz Ø450**
ATEX version	**Zone 1 / 2 / 21 / 22**
ATEX motor	**Ex nA / Exe / Ex de**
Coating suitable for outdoor application	**RAL 5010 / RAL ….**
Stainless steel version	**304 / 316 / …**
Acoustic enclosure	

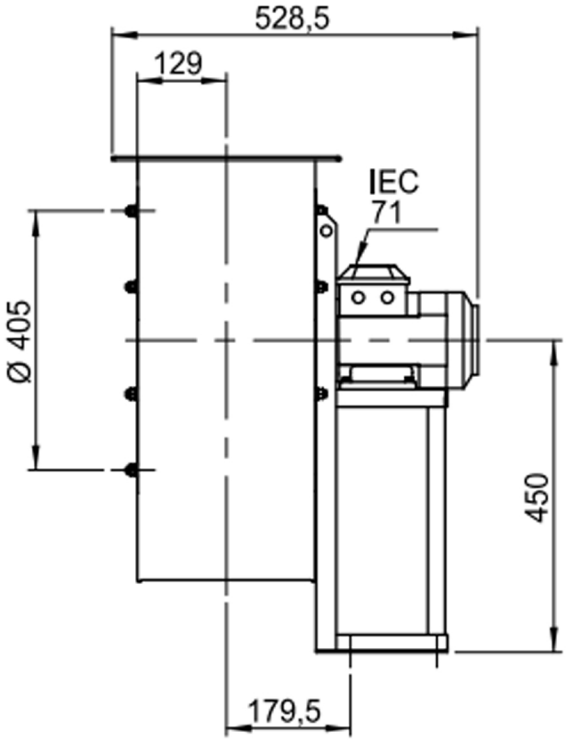

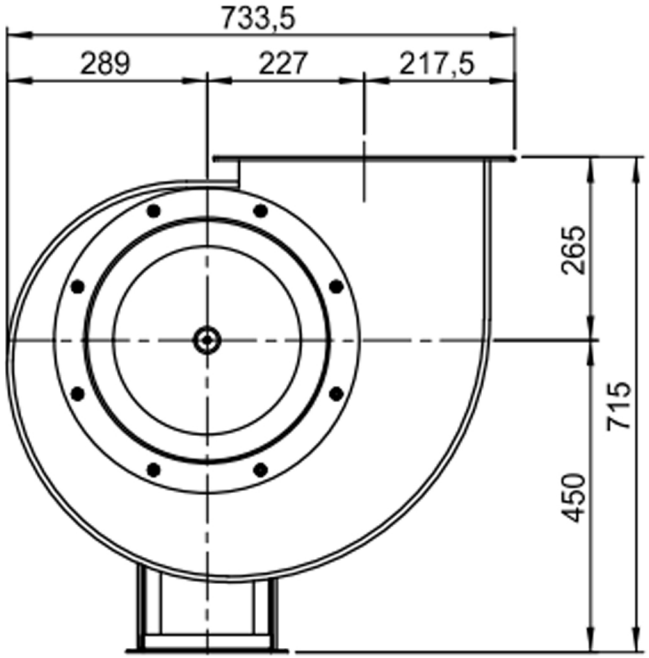

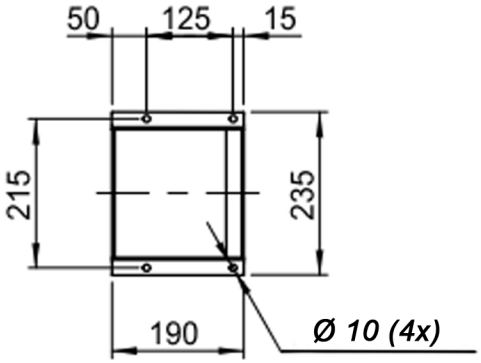

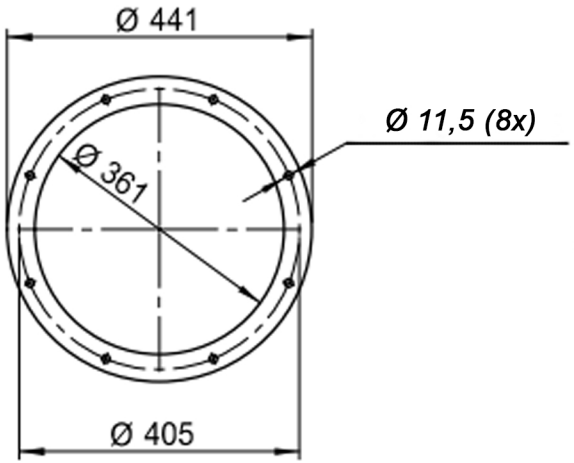

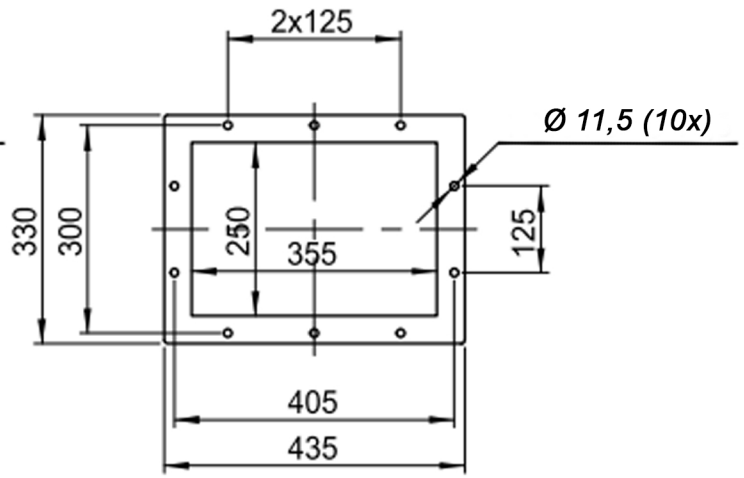

DESCRIPTION-BESCHRIJVING	SCHAAL	GEMAAKT - PREPARED	FORMAAT
BPR 351/D - RD0	1:11	Overmeer E.	A4
	DATUM 10/10/2023		
Slingerland ventilatoren	N.TEKENING - N.DRAWING V1BPR 351/D		REV. 00

Slingerland ventilatoren

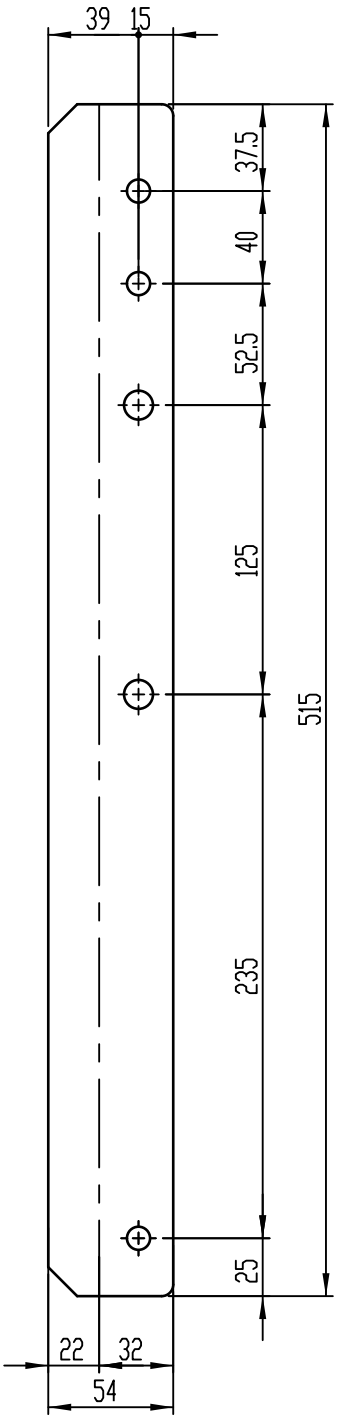

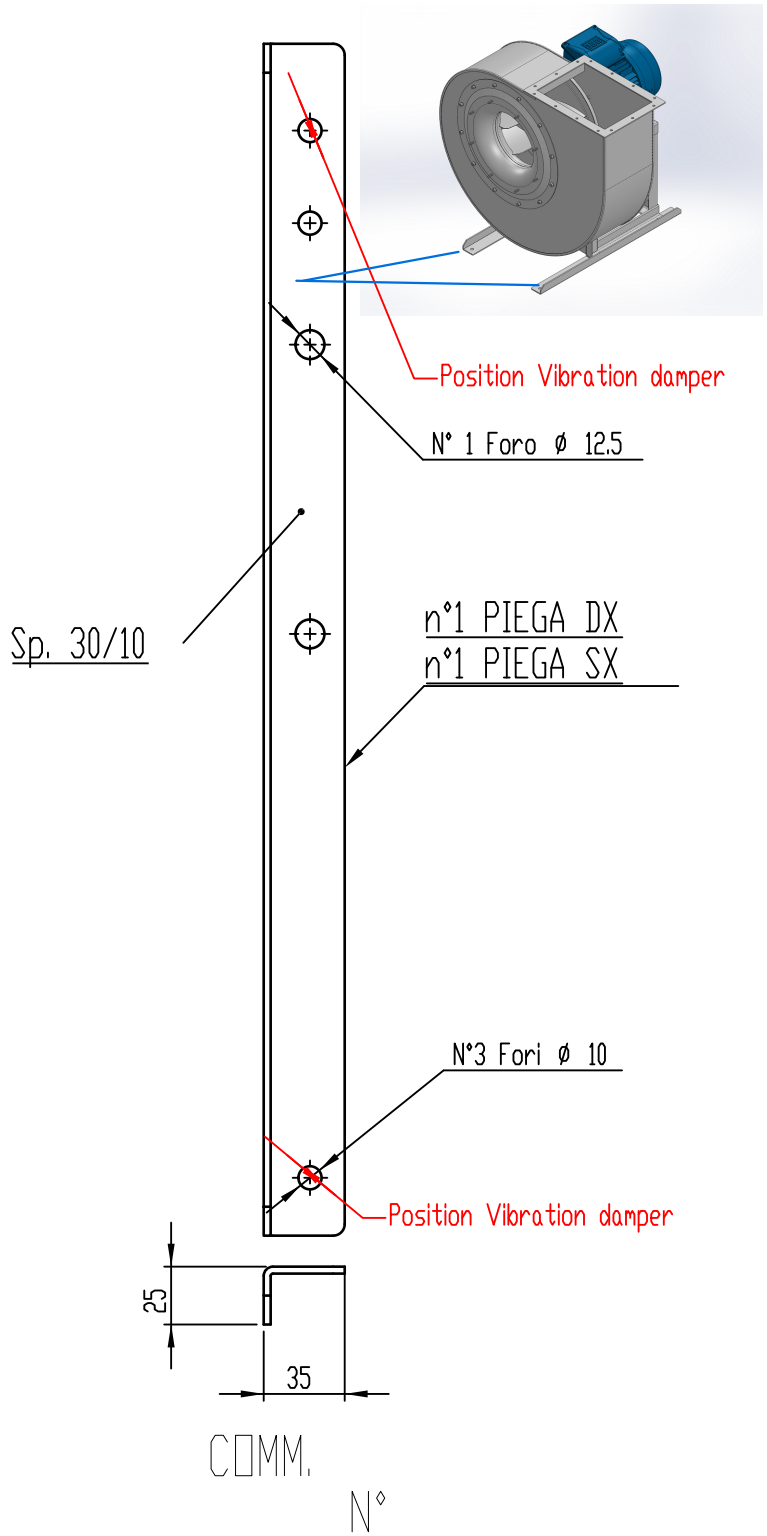

REV	DATA - DATE	DESCRIZIONE - DESCRIPTION	DISEGNATO PREPARED	CONTROLLATO CHECKED
01	04/12/2019	Adattamento a sedie nuove	Galiotto M.	De Santi G.
00	11/11/2015	PRIMA EMISSIONE	Galiotto M.	De Santi G.

DESCRIZIONE - DESCRIPTION	MATERIALE - MATERIAL	NR.FILE	PESO - WEIGHT
	Fe 360	EUR00067975	Kg 0.64

DESCRIZIONE - DESCRIPTION
Staffe per Puffer L=515
IEC 71-80

Slingerland ventilatoren

SCALA	DISEGNATO - PREPARED	FORMATO
1:3	Galiotto M.	A4
DATA 04/12/2019		

SOSTITUISCE IL - REPLACED THE N°
SOSTITUITO DAL - REPLACES BY N°

N.DISEGNO - N.DRAWING	REV.
STF047502	01